ZANEEN®

MICRO RECESSED

E9I141-

base number | Color Temperature

PROJECT	
TYPE	
SPECIFIER	
QUANTITY	
DATE	

1.To build a product code in our configurator select the specify button on the base model # product page
2. To build a manual product code on this datasheet choose from the options listed below in blue font and add the suffix to the base model #

GENERAL

Series: Micro
Brand: Platek
Division: Exterior
Mounting Type: Recessed
Mounting Location: In-Ground
Subcategory: Drive Over

PHYSICAL

Shape: Round
Diameter (mm): 95
Diameter (in): 3 3/4
Height (mm): 97
Height (in): 3 13/16
Light Distribution: Direct
Weight (kg): 0.55
Weight (lbs): 1.2
Load Resistance (kg): 2000
Load Resistance (lbs): 4409
Installation Requirement: Installation in sleeve set in concrete with a 20 - 30cm / 8 - 12" gravel drain bed
Diffuser: Clear tempered glass
Fixture Finish: SST
Fixture Material: Aluminum Die Cast
Cable Details: Supplied with 1 power cable 1m in length

ELECTRICAL

Lamp Type: LED
Input Wattage (W): 2.5
Total Output Wattage (W): 2
Driver Included: No
Driver Location: Remote
Driver Type: Constant Current - Universal
Driver Class: Class 2
Housing: (Not included - see components) L9A09600 allows for external driver (non-dimming - 120 / 277Vac [-25
Input Voltage (V): 120 - 277
Constant Current (MA): 700
Upon Request: External w/L9A09600 ONLY: Non-dimming 120 / 277Vac - min. operating temperature -25°C; if a lower operating temperature is required it must be REMOTE / (Not included - see components [IP65 or higher enclosure to be supplied by others]) Remote: (- 40°C) 0-10Vdc dimming (120 / 277Vac) / (-25°C) Phase dimming

LED

Number of LEDs: 1
Color Temperature (°K): 3000 / 4000
Max. Delivered Lumen (lm): 130 / 135
Nominal Lumen (lm): 250 / 260
CRI: >80 CRI
Lamp Life (hrs): 60000

OPTICAL

Optic°: Asymmetric
Beam Angle: 62

RATINGS AND CERTIFICATIONS

Certified By: Certified for North American Standards
IP rating: IP68
IK Rating: IK10
Bug Rating: B0 U3 G0

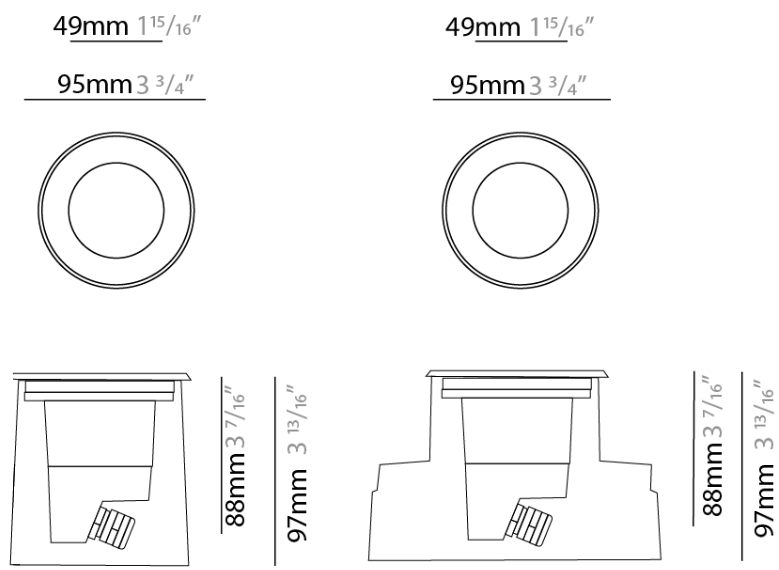

Slim Housing
L9A09500

Wide Housing
L9A09600

E

Zaneen Group Inc. G 2024, T 1800-388-3382, F 416-247-9319, www.zaneen.com

Available for International specifications by adding 'INT' at the end of the existing Model #. For assistance on 'custom' specifications, contact zteam@zaneen.com.
In a constant effort to supply the best product, we reserve the right to change specifications or materials without notice. The most recent specification sheets are found at zaneen.com

May 15, 2024, 2:13 pm

ZANEEN®

MICRO RECESSED

E9I141-

PROJECT	
TYPE	
SPECIFIER	
QUANTITY	
DATE	

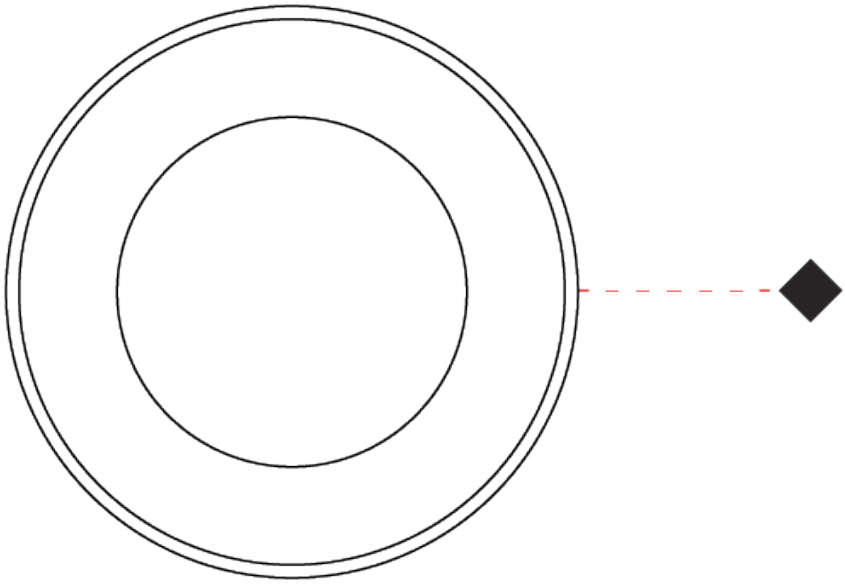

Zaneen Group Inc. © 2024, T 1800-388-3382, F 416-247-9319, www.zaneen.com

Available for International specifications by adding 'INT' at the end of the existing Model #. For assistance on 'custom' specifications, contact zteam@zaneen.com.
In a constant effort to supply the best product, we reserve the right to change specifications or materials without notice. The most recent specification sheets are found at zaneen.com

ZANEEN®

PROJECT	
TYPE	
SPECIFIER	
QUANTITY	
DATE	

MICRO RECESSED

E9I157- _____ - _____

base number | Color Temperature | Lens Options

1.To build a product code in our configurator select the specify button on the base model # product page
2. To build a manual product code on this datasheet choose from the options listed below in blue font and add the suffix to the base model #

GENERAL

Series: Micro
Brand: Platek
Division: Exterior
Mounting Type: Recessed
Mounting Location: In-Ground
Subcategory: Drive Over

PHYSICAL

Shape: Round
Diameter (mm): 95
Diameter (in): 3 3/4
Height (mm): 97
Height (in): 3 13/16
Light Distribution: Indirect
Weight (kg): 0.55
Weight (lbs): 1.2
Load Resistance (kg): 2000
Load Resistance (lbs): 4409
Installation Requirement: Installation in sleeve set in concrete with a 20 - 30cm / 8 - 12" gravel drain bed
Diffuser: Clear tempered glass
Fixture Finish: SST
Fixture Material: Aluminum Die Cast
Cable Details: Supplied with 1 power cable 0.5m in length

ELECTRICAL

Lamp Type: LED
Input Wattage (W): 5.9
Total Output Wattage (W): 5
Dimming: Non-Dimming / Phase Dimming (120Vac only) / 0-10V Dimming
Driver Included: No
Driver Location: Remote
Driver Type: Constant Current - 120/277Vac
Driver Class: Class 2
Input Voltage (V): 120 - 277
Constant Current (MA): 500
Upon Request: (Included) external w/L9A09600 only: Non-dimming 120 / 277Vac - min. operating temperature -25°C; if a lower operating temperature is required it must be REMOTE and is NOT included / (Not included - see components [IP65 or higher enclosure to be supplied by others]) Remote: (- 40°C) 0-10Vdc dimming (120 / 277Vac) / (-40°C) Phase dimming @120Vac only

LED

Number of LEDs: 3
Color Temperature (°K): 3000 / 4000
Max. Delivered Lumen (lm): 435 - 465 / 450 - 485
Nominal Lumen (lm): 570 / 600
Lamp Life (hrs): 60000

OPTICAL

Optic°: 12 / 33 / 44

RATINGS AND CERTIFICATIONS

Certified By: Certified for North American Standards
IP rating: IP68
IK Rating: IK10
Bug Rating: B0 U3 G0

Ø95mm 3 3/4"

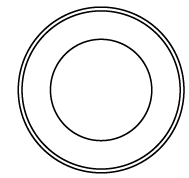

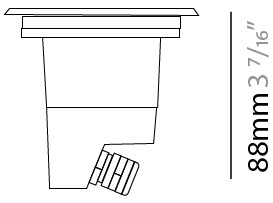

Zaneen Group Inc. © 2024, T 1800-388-3382, F 416-247-9319, www.zaneen.com
Available for International specifications by adding 'INT' at the end of the existing Model #. For assistance on 'custom' specifications, contact zteam@zaneen.com.
In a constant effort to supply the best product, we reserve the right to change specifications or materials without notice. The most recent specification sheets are found at zaneen.com

May 15, 2024, 2:13 pm

ZANEEN®

MICRO RECESSED

E9I157-

PROJECT	
TYPE	
SPECIFIER	
QUANTITY	
DATE	

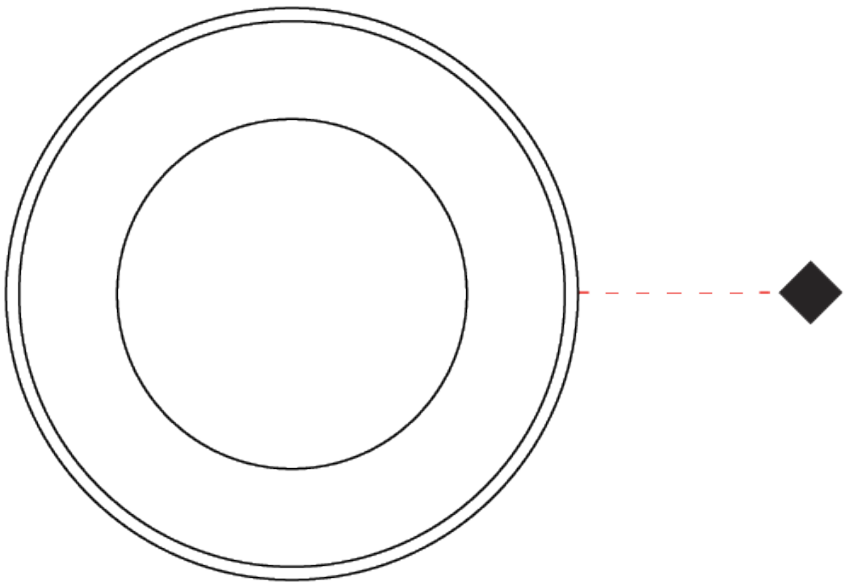

E

Zaneen Group Inc. © 2024, T 1800-388-3382, F 416-247-9319, www.zaneen.com

Available for International specifications by adding 'INT' at the end of the existing Model #. For assistance on 'custom' specifications, contact zteam@zaneen.com.
In a constant effort to supply the best product, we reserve the right to change specifications or materials without notice. The most recent specification sheets are found at zaneen.com

ZANEEN®

PROJECT	
TYPE	
SPECIFIER	
QUANTITY	
DATE	

MICRO RECESSED

E9I630-

base number Lens Options

1.To build a product code in our configurator select the specify button on the base model # product page
2. To build a manual product code on this datasheet choose from the options listed below in blue font and add the suffix to the base model #

GENERAL

Series: Micro
Brand: Platek
Division: Exterior
Mounting Type: Recessed
Mounting Location: In-Ground
Subcategory: Drive Over

PHYSICAL

Shape: Round
Diameter (mm): 95
Diameter (in): 3 3/4
Height (mm): 97
Height (in): 3 13/16
Light Distribution: Direct
Weight (kg): 0.55
Weight (lbs): 1.2
Load Resistance (kg): 2000
Load Resistance (lbs): 4409
Installation Requirement: Installation in sleeve set in concrete with a 20 - 30cm / 8 - 12" gravel drain bed
Diffuser: Clear tempered glass
Fixture Finish: SST
Fixture Material: Aluminum Die Cast
Cable Details: Supplied with 1 power cable 1m in length

ELECTRICAL

Lamp Type: LED
Input Wattage (W): 6
Total Output Wattage (W): 6
Dimming: Bluetooth technology or DMX
Control Gear: DMX
Driver Included: No
Driver Location: Remote
Driver Type: Constant Current - Universal
Driver Class: Class 2
Input Voltage (V): 120 - 277
Constant Current (MA): 500

LED

Number of LEDs: 4
Color Temperature (°K): RGBW
CRI: >80 CRI
Lamp Life (hrs): 60000
Special LEDs offerings: RGBW

OPTICAL

Optic°: 12 / 33 / 44

RATINGS AND CERTIFICATIONS

Certified By: Certified for North American Standards
IP rating: IP68
IK Rating: IK10
Bug Rating: B0 U5 G0

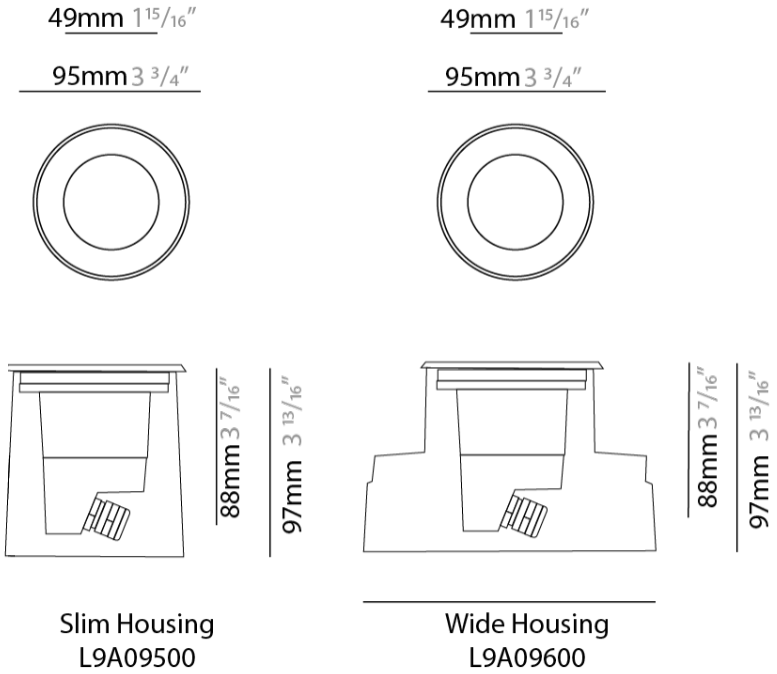

Slim Housing
L9A09500

Wide Housing
L9A09600

E

Zaneen Group Inc. © 2024, T 1800-388-3382, F 416-247-9319, www.zaneen.com

Available for International specifications by adding 'INT' at the end of the existing Model #. For assistance on 'custom' specifications, contact zteam@zaneen.com.
In a constant effort to supply the best product, we reserve the right to change specifications or materials without notice. The most recent specification sheets are found at zaneen.com

ZANEEN®

PROJECT	
TYPE	
SPECIFIER	
QUANTITY	
DATE	

MICRO RECESSED

E9I630-

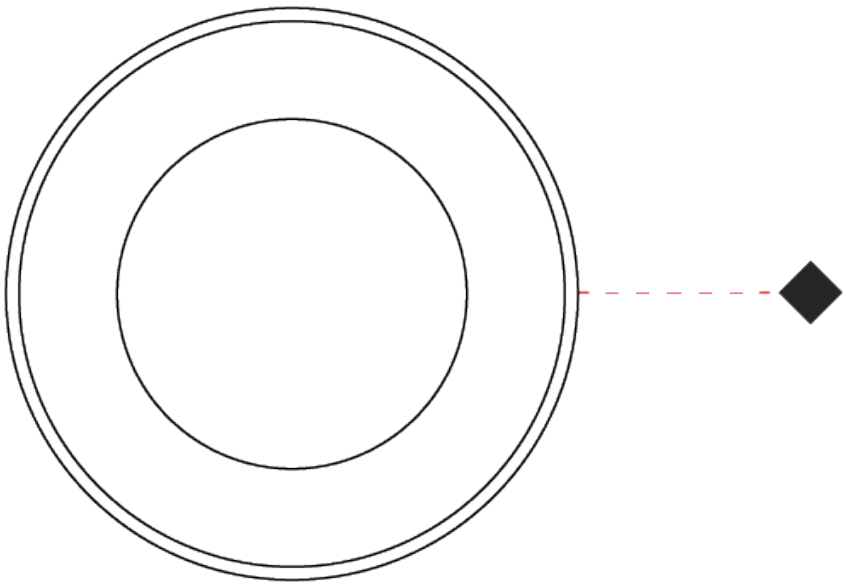

Zaneen Group Inc. © 2024, T 1800-388-3382, F 416-247-9319, www.zaneen.com

Available for International specifications by adding 'INT' at the end of the existing Model #. For assistance on 'custom' specifications, contact zteam@zaneen.com.
In a constant effort to supply the best product, we reserve the right to change specifications or materials without notice. The most recent specification sheets are found at zaneen.com

ZANEEN®

MICRO

COLOR FINISH CHART

PROJECT	
TYPE	
SPECIFIER	
QUANTITY	
DATE	

Fixture Finish

Stainless Steel Inox - SST

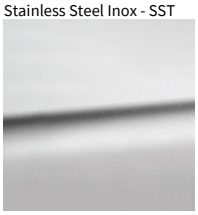

Digital: Not all screens are calibrated the same, and therefore, colors will appear differently between screens.
Physical: When texture is involved, there will be variations in color, character and tone within a product series and between product families.

Zaneen Group Inc. © 2024, T 1800-388-3382, F 416-247-9319, www.zaneen.com

Available for International specifications by adding 'INT' at the end of the existing Model #. For assistance on 'custom' specifications, contact zteam@zaneen.com.
In a constant effort to supply the best product, we reserve the right to change specifications or materials without notice. The most recent specification sheets are found at zaneen.com

ZANEEN®

MICRO

PROJECT	
TYPE	
SPECIFIER	
QUANTITY	
DATE	

LEGEND

↓	floor-mounted		pivotable		special LED (upon request) RGB, RGBW, tunable, gold+, meat+, art+, fashion+
↗	wall and ceiling: recessed and surface mounted		rotating		warm dim / natural dimming LED
↑	ceiling-mounted and wall-mounted		illuminate tilted		rechargeable battery powered
→	wall-mounted		color of suspension cable	THIS	fixture with natural vivid LED (upon request)
	omni-directional light distribution		length of suspension cable	CRI	color rendering index
	direct light distribution		reflector degree selection	°K	color temperature
	direct/indirect light distribution	S S	super spot	LM	lumen (luminous flux)
	indirect light distribution		lens	LM W	efficacy (lumens per watt)
	asymmetric light distribution		lens pack	UGR	Unified Glare Rating (UGR) range from 5-40
	aura light distribution		shine ring	316	marine grade (AISI 316 stainless steel)
	round wall or ceiling cut-out		integrated shine ring with diffuser		walk on
	square wall or ceiling cut-out		free individual colors 01-29		drive on
	the supplied jig specifies the cutout dimensions	C	individual colors: 00 (free of charge), 01-25 (extra charge)	DSC	Dark Sky Compliance
M	minimum distance (meters) lamp - object		luminaire part to be colored (F1)		Americans with Disabilities Act (less than 4" off the wall located between 27"-84" from floor)
	recessed depth		luminaire part to be colored (F2)		lamp protected against explosion
	ceiling thickness in mm		luminaire part to be colored (F3)		blown glass using traditional methods by master glass blower
	ceiling thickness selection		luminaire part to be colored (F4)		acoustic material
	dimmable DP (phase), DV (0-10V), DD (dali), DS (step-dim)		luminaire part to be colored (F5)		protection class I, protection insulation
	included or excluded LED driver/transformer/ control gear		color of 3-circuit adaptor		protection class II, protection insulation
	separately switchable		indirect diffuser		ETL Certified to UL and CSA Standards
	sensor	D	direct diffuser		UL Certified to UL and CSA Standards
	remote control		ball-proof (upon request)		CSA Certified to UL and CSA Standards
	available upon request		accessory		Certified for North American Standards

IP RATING

IP20	protected against ingress of solid bodies greater than 12.5mm (finger)
IP33	protected against ingress of solid bodies greater than 2.5mm protected against sprays of water up to 60 degrees from the vertical (rain)
IP40	protected against ingress of solid bodies greater than 1mm (wire) no protection against the ingress of moisture
IP43	protected against ingress of solid bodies greater than 1mm (wire) protected against sprays of water up to 60 degrees from the vertical (rain)
IP44	protected against ingress of solid bodies greater than 1mm (wire) protected against water splashed from all directions
IP54	protected against limited ingress of dust (wet rooms/covered outdoor areas) protected against water splashed from all directions
IP65	protected against ingress of dust protected against jets of water
IP66	protected against ingress of dust protected against powerful jets of water or heavy seas
IP67	protected against ingress of dust protected against immersion of water between 15cm - 1m for 30 minutes
IP68	protected against ingress of dust protected against immersion of water under pressure for long periods

IK RATING

IK01	protected against 0.14 joules impact (equivalent to 0.25kg mass dropped from 56mm above the surface)
IK02	protected against 0.2 joules impact (equivalent to 0.25kg mass dropped from 80mm above the surface)
IK03	protected against 0.35 joules impact (equivalent to 0.25kg mass dropped from 140mm above the surface)
IK04	protected against 0.5 joules impact (equivalent to 0.25kg mass dropped from 200mm above the surface)
IK05	protected against 0.7 joules impact (equivalent to 0.25kg mass dropped from 280mm above the surface)
IK06	protected against 1 joules impact (equivalent to 0.25kg mass dropped from 400mm above the surface)
IK07	protected against 2 joules impact (equivalent to 0.5kg mass dropped from 400mm above the surface)
IK08	protected against 5 joules impact (equivalent to 1.7kg mass dropped from 300mm above the surface)
IK09	protected against 10 joules impact (equivalent to 5.0kg mass dropped from 200mm above the surface)
IK10	protected against 20 joules impact (equivalent to 5.0kg mass dropped from 400mm above the surface)